DS-2CD2347G2-L(U) (C)
4 MP ColorVu Fixed Turret Network Camera

ColorVu

Hikvision ColorVu technology provides 24/7 vivid colorful images with F1.0 advanced lenses and high performance sensors. F1.0 super-aperture collects more light to produce brighter images. Advanced sensor technology can vastly improve the utilization of available light.

- High quality imaging with 4 MP resolution
- Efficient H.265+ compression technology
- Clear imaging against strong backlight due to 130 dB WDR technology
- Built-in microphone for real-time audio security(-U)
- Focus on human and vehicle targets classification based on deep learning
- 24/7 colorful imaging
- Water and dust resistant (IP67)

▪ Specification

Camera	
Image Sensor	1/1.8" Progressive Scan CMOS
Min. Illumination	Color: 0.0005 Lux @ (F1.0, AGC ON), B/W: 0 Lux with white light
Shutter Speed	1/3 s to 1/100,000 s
Slow Shutter	Yes
P/N	P/N
Wide Dynamic Range	130 dB
Angle Adjustment	Pan: 0° to 360°, tilt: 0° to 75°, rotate: 0° to 360°
Lens	
Lens Type	Fixed focal lens, 2.8, 4, and 6 mm optional
Iris Type	Fixed
Lens Type & FOV	2.8 mm, horizontal FOV 112°, vertical FOV 61°, diagonal FOV 134° 4 mm, horizontal FOV 95°, vertical FOV 51°, diagonal FOV 115° 6 mm, horizontal FOV 58°, vertical FOV 31°, diagonal FOV 69°
Depth of Focus	2.8 mm, 2.5 m to ∞ 4 mm, 3.5 m to ∞ 6 mm, 7.5 m to ∞
Aperture	F1.0
Lens Mount	M16
DORI	
DORI	2.8 mm, D: 58 m, O: 23 m, R: 11 m, I: 2 m 4 mm, D: 77 m, O: 30 m, R: 15 m, I: 7 m 6 mm, D: 115 m, O: 45 m, R: 23 m, I: 11 m
Illuminator	
Supplement Light Type	White Light
White Light Range	30 m
Smart Supplement Light	Yes
Video	
Max. Resolution	2688 × 1520
Main Stream	50 Hz: 25 fps (2688 × 1520, 1920 × 1080, 1280 × 720) 60 Hz: 30 fps (2688 × 1520, 1920 × 1080, 1280 × 720)
Sub Stream	50 Hz: 25 fps (640 × 480, 640 × 360) 60 Hz: 30 fps (640 × 480, 640 × 360)
Third Stream	50 Hz: 10 fps (1920 × 1080, 1280 × 720, 640 × 480, 640 × 360) 60 Hz: 10 fps (1920 × 1080, 1280 × 720, 640 × 480, 640 × 360) *Third stream is supported under certain settings.
Video Compression	Main stream: H.265/H.264/H.265+/H.264+ Sub-stream: H.265/H.264/MJPEG Third stream: H.265/H.264 *Third stream is supported under certain settings.
Video Bit Rate	32 Kbps to 8 Mbps
H.264 Type	Baseline Profile/Main Profile/High Profile
H.265 Type	Main Profile
H.264+	Main Stream supports

H.265+	Main stream supports
Bit Rate Control	CBR/VBR
Scalable Video Coding (SVC)	H.264 and H.265 encoding
Region of Interest (ROI)	1 fixed region for main stream and sub-stream
Audio	
Environment Noise Filtering	-U: Yes
Audio Sampling Rate	-U: 8 kHz/16 kHz/32 kHz/44.1 kHz/48 kHz
Audio Compression	-U: G.711ulaw/G.711alaw/G.722.1/G.726/MP2L2/PCM/MP3/AAC
Audio Bit Rate	-U: 64 Kbps (G.711ulaw/G.711alaw)/16 Kbps (G.722.1)/16 Kbps (G.726)/32 to 192 Kbps (MP2L2)/8 to 320 Kbps (MP3)/16 to 64 Kbps (AAC)
Network	
Simultaneous Live View	Up to 6 channels
API	Open Network Video Interface (PROFILE S, PROFILE G, PROFILE T), ISAPI, SDK
Protocols	TCP/IP, ICMP, HTTP, HTTPS, FTP, DHCP, DNS, DDNS, RTP, RTSP, NTP, UPnP, SMTP, IGMP, 802.1X, QoS, IPv4, IPv6, UDP, Bonjour, SSL/TLS, PPPoE, SNMP, ARP
User/Host	Up to 32 users. 3 user levels: administrator, operator and user
Security	Password protection, complicated password, HTTPS encryption, IP address filter, Security Audit Log, basic and digest authentication for HTTP/HTTPS, TLS 1.1/1.2, WSSE and digest authentication for Open Network Video Interface
Network Storage	MicroSD/SDHC/SDXC card (256 GB) local storage, and NAS (NFS, SMB/CIFS), auto network replenishment (ANR) Together with high-end Hikvision memory card, memory card encryption and health detection are supported
Client	iVMS-4200, Hik-Connect, Hik-Central
Web Browser	Plug-in required live view: IE 10+ Plug-in free live view: Chrome 57.0+, Firefox 52.0+ Local service: Chrome 57.0+, Firefox 52.0+
Image	
SNR	≥ 52 dB
Day/Night Switch	Auto, Schedule
Image Enhancement	BLC, HLC, 3D DNR
Image Parameters Switch	Yes
Image Settings	Rotate mode, saturation, brightness, contrast, sharpness, gain, white balance adjustable by client software or web browser
Interface	
Built-in Microphone	-U: Yes
On-board Storage	Built-in micro SD/SDHC/SDXC slot, up to 256 GB
Hardware Reset	Yes
Communication Interface	1 RJ45 10 M/100 M self-adaptive Ethernet port
Event	
Basic Event	Motion detection (human and vehicle targets classification), video tampering alarm, exception
Smart Event	Scene change detection
Deep Learning Function	
Face Capture	Yes

Perimeter Protection	Line crossing detection, intrusion detection, region entrance detection, region exiting detection
General	
Linkage Method	Upload to NAS/memory card/FTP, notify surveillance center, trigger recording, trigger capture, send email
Firmware Version	V5.5.112
Web Client Language	33 languages English, Russian, Estonian, Bulgarian, Hungarian, Greek, German, Italian, Czech, Slovak, French, Polish, Dutch, Portuguese, Spanish, Romanian, Danish, Swedish, Norwegian, Finnish, Croatian, Slovenian, Serbian, Turkish, Korean, Traditional Chinese, Thai, Vietnamese, Japanese, Latvian, Lithuanian, Portuguese (Brazil), Ukrainian
General Function	Anti-flicker, heartbeat, mirror, privacy mask, flash log, password reset via email, pixel counter
Software Reset	Yes
Storage Conditions	-30 °C to 60 °C (-22 °F to 140 °F). Humidity 95% or less (non-condensing)
Startup and Operating Conditions	-30 °C to 60 °C (-22 °F to 140 °F). Humidity 95% or less (non-condensing)
Power Supply	12 VDC ± 25%, reverse polarity protection PoE: 802.3af, Class 3
Power Consumption and Current	12 VDC, 0.55 A, max. 6.6 W PoE (802.3af, 36 V to 57 V), 0.22 A to 0.13 A, max. 7.6 W
Power Interface	Ø5.5 mm coaxial power plug
Material	Aluminum alloy body, except for trim ring
Screw Material	SUS304
Camera Dimension	Ø138.3 mm × 125.2 mm (Ø5.4" × 4.9")
Package Dimension	170 mm × 170 mm × 150 mm (7" × 7" × 5.9")
Camera Weight	Approx. 750 g (1.7 lb.)
With Package Weight	Approx. 1055 g (2.3 lb.)
Approval	
EMC	FCC SDoC (47 CFR Part 15, Subpart B); CE-EMC (EN 55032: 2015, EN 61000-3-2: 2014, EN 61000-3-3: 2013, EN 50130-4: 2011 +A1: 2014); RCM (AS/NZS CISPR 32: 2015); IC VoC (ICES-003: Issue 6, 2016); KC (KN 32: 2015, KN 35: 2015)
Safety	UL (UL 60950-1); CB (IEC 60950-1:2005 + Am 1:2009 + Am 2:2013, IEC 62368-1:2014); CE-LVD (EN 60950-1:2005 + Am 1:2009 + Am 2:2013, IEC 62368-1:2014); BIS (IS 13252(Part 1):2010+A1:2013+A2:2015); LOA (IEC/EN 60950-1)
Environment	CE-RoHS (2011/65/EU); WEEE (2012/19/EU); Reach (Regulation (EC) No 1907/2006)
Protection	IP67 (IEC 60529-2013)

▪ Available Model

DS-2CD2347G2-LU (2.8/4/6 mm)

DS-2CD2347G2-L (2.8/4/6 mm)

▪ Dimension

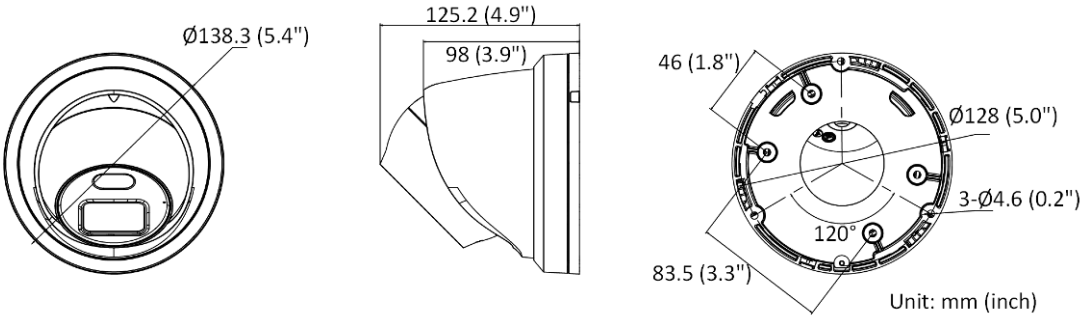

▪ Accessory

▪ Optional

DS-1273ZJ-140B Wall Mount	DS-1273ZJ-140 Wall Mount	DS-1275ZJ-SUS Vertical Pole Mount	DS-1280ZJ-PT6 Junction Box	DS-1276ZJ-SUS Corner Mount
	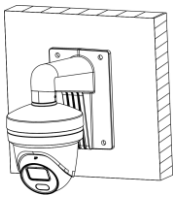			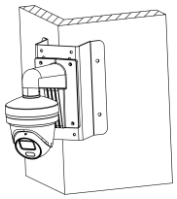

DS-1271ZJ-140 Pendant Mount
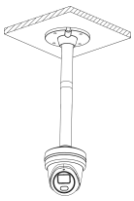

Distributed by

Headquarters
No.555 Qianmo Road, Binjiang District,
Hangzhou 310051, China
T +86-571-8807-5998
overseasbusiness@hikvision.com

Hikvision USA
T +1-909-895-0400
sales.usa@hikvision.com

Hikvision Europe
T +31-23-5542770
sales.eu@hikvision.com

Hikvision UK & Ireland
T +01628-902140
sales.uk@hikvision.com

Hikvision UAE
T +971-4-4432090
salesme@hikvision.com

Hikvision Russia
T +7-495-669-67-99
saleru@hikvision.com

Hikvision Australia
T +61-2-8599-4233
salesau@hikvision.com

Hikvision Italy
T +39-0438-6902
info.it@hikvision.com

Hikvision South Africa
Tel: +27 (10) 0351172
sale.africa@hikvision.com

Hikvision Singapore
T +65-6684-4718
sg@hikvision.com

Hikvision Korea
T +82-(0)31-731-8817
sales.korea@hikvision.com

Hikvision India
T +91-22-28469900
sales@pramahikvision.com

Hikvision Brazil
T +55 11 3318-0050
Latam.support@hikvision.com

Hikvision France
T +33(0)1-85-330-450
info.fr@hikvision.com

Hikvision Spain
T +34-91-737-16-55
info.es@hikvision.com

Hikvision Poland
T +48-22-460-01-50
info.pl@hikvision.com

Hikvision Canada
T +1-866-200-6690
sales.canada@hikvision.com

Hikvision Turkey
T +90 (216)521 7070- 7074
sales.tr@hikvision.com

Hikvision Kazakhstan
T +7-727-9730667
nikia.panfilov@hikvision.ru

Hikvision Tashkent
T +99-87-1238-9438
uzb@hikvision.ru

Hikvision Indonesia
T +62-21-2933759
Sales.Indonesia@hikvision.com

Hikvision Thailand
T +662-275-9949
sales.thailand@hikvision.com

Hikvision Malaysia
T +601-7652-2413
sales.my@hikvision.com

Hikvision Vietnam
T +84-974270888
sales.vt@hikvision.com

Hikvision Hong Kong
T +852-2151-1761
info.hk@hikvision.com

Hikvision Colombia
sales.colombia@hikvision.com

© Hikvision Digital Technology Co., Ltd. 2020 | Data subject to change without notice |

050511220210409